SUPRO®
BOX

R SERIES

TRANSPORTATION AND STORAGE CASES

suprobox.com

Suprobox cases have been made to withstand the toughest environmental and climatic conditions.

The case is manufactured as a solid uniform structure which makes it extra resistant to impact and vibration enabling the case to be handled and transported in extreme situations.

The polymer raw material resin is UV resistant and is specifically designed to function in extreme temperatures and under solar load.

Our products offer protection of delicate equipment used in a vast spectrum of professional fields such as: electronics, data protection, lab & testing, medical, rescue, aerospace, broadcast, meteorology, satellite communications, radars, mobile military.

R SERIES	479 different sizes
RACK CASES	36 different sizes

With over 500 sizes SUPROBOX offer one of the widest selections available in the market. Once placed in a Suprobox case, your delicate equipment and instruments are transported and used under complete protection from shock, vibration, moisture and impact. Your cases come furnished with the appropriate grade foam and/or shock mounting equipment in line with your special project requirements.

- Ruggedized case body made from impact resistant PE material
- Heavy-duty polymer handles with soft rubber grip
- Stainless steel, heavy duty catches
- Membrane valve (standard)
- Waterproof silicone seal between body and lid
- Extra resistant to impact & vibration
- UV resistant
- Made to withstand extreme temperatures & solar load
- Optional rugged edge castors
- Custom internals available
- Color options
- Multibrix® stacking system (straight or cross stacking of same or different size cases)
- MIL-STD 810 G, Def Stan 81-41, STANAG 4280
- Dust and Water Protection rated IP 65/IP 67

Contents

Suprobox R Series Technical Specifications 05
Suprobox R Series 06
Custom Solutions 29
Suprobox R Series Options 30
Suprobox Rack Series Technical Specifications 33
Suprobox Rack Cases 34
Suprobox Rack Series Dimensions 38
Suprobox Rack Series Options 40
Multibrix 43
Tests 44

SUPROBOX R SERIES

TECHNICAL SPECIFICATIONS

Heavy-duty polymer handles with soft rubber grip

Breather valve maintains pressure balance

76mm rigid edge casters enable the case to be mobilized by lifting the handle. Built in edge casters are compatible with the stacking feature

Manufactured as a solid uniform structure which makes it extra resistant to impact & vibration

Multibrix stacking system

Stainless steel, heavy duty catches are larger than standard products available on the market

Waterproof silicone seal between base and lid

UV resistant made to withstand extreme temperatures & solar load

HEAT DROP RAIN CRUSH WATER DUST

PRODUCT	EXTERNAL DIMENSIONS (MM)			INTERNAL DIMENSIONS (MM)					Handles	Weight Appr. (Kg)	Special Features
	Length	Width	Height	Length	Width	Height	Base Height	Lid Height			
3030-3010	300	300	405	210	210	355	280	75	2	4,1	--
4040-3010	400	400	405	310	310	355	280	75	2	6,2	--
5050-3010	500	500	405	410	410	355	280	75	2	8,1	--
6050-2010	600	500	300	510	410	250	180	70	2	8,4	--
6050-3010	600	500	400	510	410	350	280	70	2	9,3	--
6050-2023	600	500	430	510	410	380	180	200	4	10,5	--
6050-4010	600	500	500	510	410	450	380	70	2	10,7	--
6050-3023	600	500	530	510	410	480	280	200	4	11,5	--
6050-5010	600	500	600	510	410	550	480	70	2	12,0	--
6050-2043	600	500	630	510	410	580	180	400	4	12,9	--
6050-4023	600	500	630	510	410	580	380	200	4	12,8	--
6050-3043	600	500	730	510	410	680	280	400	4	13,9	--
6050-5023	600	500	730	510	410	680	480	200	4	14,1	--
6050-4043	600	500	830	510	410	780	380	400	4	15,2	--
6050-5043	600	500	930	510	410	880	480	400	4	16,5	--
7070-2012	700	700	325	610	610	255	180	75	4	13,7	--
7070-2012T	700	700	325	610	610	255	180	75	4	14,3	Wheels
7070-3012	700	700	425	610	610	355	280	75	4	15,2	--
7070-3012T	700	700	425	610	610	355	280	75	4	15,8	Wheels
7070-2034	700	700	540	610	610	470	180	290	8	18,5	--
7070-2034T	700	700	540	610	610	470	180	290	8	19,1	Wheels
7070-3024	700	700	540	610	610	470	280	190	8	18,5	--
7070-3024T	700	700	540	610	610	470	280	190	8	19,1	Wheels
8040-2010	800	400	305	710	310	255	180	75	2	9,0	--
8040-2010T	800	400	305	710	310	255	180	75	2	9,6	Wheels
8040-3010	800	400	405	710	310	355	280	75	2	10,0	--
8040-3010T	800	400	405	710	310	355	280	75	2	10,6	Wheels
8050-3010	800	500	405	710	410	355	280	75	2	11,6	--

3030-3010

6050-5010

PRODUCT	EXTERNAL DIMENSIONS (MM)			INTERNAL DIMENSIONS (MM)					Handles	Weight Appr. (Kg)	Special Features
	Length	Width	Height	Length	Width	Height	Base Height	Lid Height			
8050-3010T	800	500	405	710	410	355	280	75	2	12,2	Wheels
8050-4010	800	500	505	710	410	455	380	75	2	12,8	--
8050-4010T	800	500	505	710	410	455	380	75	2	13,4	Wheels
8060-2012	800	600	325	710	510	255	180	75	4	13,6	--
8060-2012T	800	600	325	710	510	255	180	75	4	14,2	Wheels
8060-1125	800	600	360	710	510	290	90	200	4	14,7	--
8060-3012	800	600	425	710	510	355	280	75	4	14,8	--
8060-3012T	800	600	425	710	510	355	280	75	4	15,4	Wheels
8060-2025	800	600	450	710	510	380	180	200	8	17,0	--
8060-2025T	800	600	450	710	510	380	180	200	8	17,6	Wheels
8060-4012	800	600	525	710	510	455	380	75	4	16,6	--
8060-4012T	800	600	525	710	510	455	380	75	4	17,2	Wheels
8060-3025	800	600	550	710	510	480	280	200	8	18,2	--
8060-3025T	800	600	550	710	510	480	280	200	8	18,8	Wheels
8060-1145	800	600	560	710	510	490	90	400	4	17,8	--
8060-5012	800	600	625	710	510	555	480	75	4	17,6	--
8060-5012T	800	600	625	710	510	555	480	75	4	18,2	Wheels
8060-2045	800	600	650	710	510	580	180	400	8	20,1	--
8060-2045T	800	600	650	710	510	580	180	400	8	20,7	Wheels
8060-4025	800	600	650	710	510	580	380	200	8	20,0	--
8060-4025T	800	600	650	710	510	580	380	200	8	20,6	Wheels
8060-3045	800	600	750	710	510	680	280	400	8	21,3	--
8060-3045T	800	600	750	710	510	680	280	400	8	21,9	Wheels
8060-5025	800	600	750	710	510	680	480	200	8	21,0	--
8060-5025T	800	600	750	710	510	680	480	200	8	21,6	Wheels
8060-4045	800	600	850	710	510	780	380	400	8	23,1	--
8060-4045T	800	600	850	710	510	780	380	400	8	23,7	Wheels
8060-5045	800	600	950	710	510	880	480	400	8	24,1	--

8060-3025T

8060-2012T

PRODUCT	EXTERNAL DIMENSIONS (MM)			INTERNAL DIMENSIONS (MM)					Handles	Weight Appr. (Kg)	Special Features
	Length	Width	Height	Length	Width	Height	Base Height	Lid Height			
8060-5045T	800	600	950	710	510	880	480	400	8	24,7	Wheels
8070-2012	800	700	325	710	610	255	180	75	4	15,1	--
8070-2012T	800	700	325	710	610	255	180	75	4	15,7	Wheels
8070-3012	800	700	425	710	610	355	280	75	4	16,7	--
8070-3012T	800	700	425	710	610	355	280	75	4	17,3	Wheels
8070-4012	800	700	525	710	610	455	380	75	4	18,2	--
8070-4012T	800	700	525	710	610	455	380	75	4	18,8	Wheels
8070-2034	800	700	540	710	610	470	180	290	8	20,1	--
8070-2034T	800	700	540	710	610	470	180	290	8	20,7	Wheels
8070-3024	800	700	540	710	610	470	280	190	8	20,1	--
8070-3024T	800	700	540	710	610	470	280	190	8	20,7	Wheels
8070-2044	800	700	640	710	610	570	180	390	8	21,7	--
8070-2044T	800	700	640	710	610	570	180	390	8	22,3	Wheels
8070-4024	800	700	640	710	610	570	380	190	8	21,6	--
8070-4024T	800	700	640	710	610	570	380	190	8	21,6	Wheels
8070-6012	800	700	725	710	610	655	580	75	4	24,1	--
8070-6012T	800	700	725	710	610	655	580	75	4	24,7	Wheels
8070-3044	800	700	740	710	610	670	280	390	8	23,3	--
8070-3044T	800	700	740	710	610	670	280	390	8	23,9	Wheels
8070-4034	800	700	740	710	610	670	380	290	8	23,2	--
8070-4034T	800	700	740	710	610	670	380	290	8	23,8	Wheels
8070-2064	800	700	840	710	610	770	180	590	8	25,0	--
8070-2064T	800	700	840	710	610	770	180	590	8	25,6	Wheels
8070-6024	800	700	840	710	610	770	580	190	8	27,5	--
8070-6024T	800	700	840	710	610	770	580	190	8	28,1	Wheels
8070-3064	800	700	940	710	610	870	280	590	8	26,6	--
8070-3064T	800	700	940	710	610	870	280	590	8	27,2	Wheels
8070-6034	800	700	940	710	610	870	580	290	8	29,1	--

8070-2044T

8070-4024T

PRODUCT	EXTERNAL DIMENSIONS (MM)			INTERNAL DIMENSIONS (MM)					Handles	Weight Appr. (Kg)	Special Features
	Length	Width	Height	Length	Width	Height	Base Height	Lid Height			
8070-6034T	800	700	940	710	610	870	580	290	8	29,7	Wheels
8070-4064	800	700	1040	710	610	970	380	590	8	28,1	--
8070-4064T	800	700	1040	710	610	970	380	590	8	28,7	Wheels
8070-6044	800	700	1040	710	610	970	580	390	8	30,7	--
8070-6044T	800	700	1040	710	610	970	580	390	8	31,3	Wheels
8080-2012	800	800	325	710	710	255	180	75	4	17,8	--
8080-2012T	800	800	325	710	710	255	180	75	4	18,4	Wheels
8080-3412	800	800	465	710	710	395	320	75	4	20,2	--
8080-3412T	800	800	465	710	710	395	320	75	4	20,8	Wheels
8080-5012	800	800	625	710	710	555	480	75	4	23,1	--
8080-5012T	800	800	625	710	710	555	480	75	4	23,7	Wheels
8080-6012	800	800	725	710	710	655	580	75	4	27,9	--
8080-6012T	800	800	725	710	710	655	580	75	4	28,5	Wheels
8080-2054	800	800	740	710	710	670	180	490	8	26,1	--
8080-2054T	800	800	740	710	710	670	180	490	8	26,7	Wheels
8080-5024	800	800	740	710	710	670	480	190	8	26,1	--
8080-5024T	800	800	740	710	710	670	480	190	8	26,7	Wheels
8080-6412	800	800	765	710	710	695	620	75	4	28,7	--
8080-6412T	800	800	765	710	710	695	620	75	4	29,3	Wheels
8080-7412	800	800	865	710	710	795	720	75	4	30,8	--
8080-7412T	800	800	865	710	710	795	720	75	4	31,4	Wheels
8080-2068	800	800	880	710	710	810	180	630	8	31,9	--
8080-2068T	800	800	880	710	710	810	180	630	8	32,5	Wheels
8080-3454	800	800	880	710	710	810	320	490	8	28,5	--
8080-3454T	800	800	880	710	710	810	320	490	8	29,1	Wheels
8080-5038	800	800	880	710	710	810	480	330	8	28,5	--
8080-5038T	800	800	880	710	710	810	480	330	8	29,1	Wheels
8080-6424	800	800	880	710	710	810	620	190	8	31,7	--
8080-6424T	800	800	880	710	710	810	620	190	8	32,3	Wheels

8080-2012T

8080-7412T

PRODUCT	EXTERNAL DIMENSIONS (MM)			INTERNAL DIMENSIONS (MM)					Handles	Weight Appr. (Kg)	Special Features
	Length	Width	Height	Length	Width	Height	Base Height	Lid Height			
8080-3468	800	800	1020	710	710	950	320	630	8	34,3	--
8080-3468T	800	800	1020	710	710	950	320	630	8	34,9	Wheels
8080-6438	800	800	1020	710	710	950	620	330	8	34,1	--
8080-6438T	800	800	1020	710	710	950	620	330	8	34,7	Wheels
8080-9012	800	800	1025	710	710	955	880	75	4	34,4	--
8080-9012T	800	800	1025	710	710	955	880	75	4	34,4	Wheels
8080-2094	800	800	1140	710	710	1070	180	890	8	37,4	--
8080-2094T	800	800	1140	710	710	1070	180	890	8	38,0	Wheels
8080-6054	800	800	1140	710	710	1070	580	490	8	36,2	--
8080-6054T	800	800	1140	710	710	1070	580	490	8	36,8	Wheels
8080-9024	800	800	1140	710	710	1070	880	190	8	37,4	--
8080-9024T	800	800	1140	710	710	1070	880	190	8	38,0	Wheels
8080-10412	800	800	1165	710	710	1095	1020	75	4	37,3	--
8080-10412T	800	800	1165	710	710	1095	1020	75	4	37,9	Wheels
8080-20108	800	800	1280	710	710	1210	180	1030	8	40,3	--
8080-20108T	800	800	1280	710	710	1210	180	1030	8	40,9	Wheels
8080-3494	800	800	1280	710	710	1210	320	890	8	39,8	--
8080-3494T	800	800	1280	710	710	1210	320	890	8	40,4	Wheels
8080-5078	800	800	1280	710	710	1210	480	730	8	39,2	--
8080-5078T	800	800	1280	710	710	1210	480	730	8	39,8	Wheels
8080-6068	800	800	1280	710	710	1210	580	630	8	42,0	--
8080-6068T	800	800	1280	710	710	1210	580	630	8	42,6	Wheels
8080-6464	800	800	1280	710	710	1210	620	590	8	41,9	--
8080-6464T	800	800	1280	710	710	1210	620	590	8	42,5	Wheels
8080-7454	800	800	1280	710	710	1210	720	490	8	39,1	--
8080-7454T	800	800	1280	710	710	1210	720	490	8	39,7	Wheels
8080-9038	800	800	1280	710	710	1210	880	330	8	39,8	--
8080-9038T	800	800	1280	710	710	1210	880	330	8	40,6	Wheels
8080-10424	800	800	1280	710	710	1210	1020	190	8	40,3	--

8080-20108T

8080-6464T

PRODUCT	EXTERNAL DIMENSIONS (MM)			INTERNAL DIMENSIONS (MM)					Handles	Weight Appr. (Kg)	Special Features
	Length	Width	Height	Length	Width	Height	Base Height	Lid Height			
8080-10424T	800	800	1280	710	710	1210	1020	190	8	40,9	Wheels
9040-3010	900	400	405	810	310	355	280	75	2	11,0	--
9040-3010T	900	400	405	810	310	355	280	75	2	11,6	Wheels
9050-1410	900	500	245	810	410	195	120	75	2	10,8	--
9050-1410T	900	500	245	810	410	195	120	75	2	11,4	Wheels
9050-3010	900	500	405	810	410	355	280	75	2	12,6	--
9050-3010T	900	500	405	810	410	355	280	75	2	13,2	Wheels
9050-3010TTEP	900	500	405	810	410	355	280	75	2	15,5	Wheels + Trays
9050-4010	900	500	505	810	410	455	380	75	2	14,4	--
9050-4010T	900	500	505	810	410	455	380	75	2	15,0	Wheels
9050-4010TTEP	900	500	505	810	410	455	380	75	2	17,3	Wheels + Trays
9050-1432	900	500	465	810	410	415	120	295	4	14,4	--
9050-1432T	900	500	465	810	410	415	120	295	4	15,0	Wheels
9050-1442	900	500	565	810	410	515	120	395	4	17,3	--
9050-1442T	900	500	565	810	410	515	120	395	4	17,9	Wheels
9050-3032	900	500	625	810	410	575	280	295	4	16,1	--
9050-3032T	900	500	625	810	410	575	280	295	4	16,7	Wheels
9050-4032	900	500	725	810	410	675	380	295	4	17,9	--
9050-4032T	900	500	725	810	410	675	380	295	4	18,5	Wheels
9050-3042	900	500	725	810	410	675	280	395	4	17,5	--
9050-3042T	900	500	725	810	410	675	280	395	4	18,1	Wheels
9060-2012	900	600	325	810	510	255	180	75	4	14,2	--
9060-2012T	900	600	325	810	510	255	180	75	4	14,8	Wheels
9060-3012	900	600	425	810	510	355	280	75	4	15,5	--
9060-3012T	900	600	425	810	510	355	280	75	4	16,1	Wheels
9060-2025	900	600	450	810	510	380	180	200	8	17,9	--
9060-2025T	900	600	450	810	510	380	180	200	8	18,5	Wheels
9060-4012	900	600	525	810	510	455	380	75	4	17,2	--
9060-4012T	900	600	525	810	510	455	380	75	4	17,2	Wheels

8080-10424T

9050-4010TTEP

PRODUCT	EXTERNAL DIMENSIONS (MM)			INTERNAL DIMENSIONS (MM)					Handles	Weight Appr. (Kg)	Special Features
	Length	Width	Height	Length	Width	Height	Base Height	Lid Height			
9060-3025	900	600	550	810	510	480	280	200	8	19,2	--
9060-3025T	900	600	550	810	510	480	280	200	8	19,8	Wheels
9060-5012	900	600	625	810	510	555	480	75	4	18,5	--
9060-5012T	900	600	625	810	510	555	480	75	4	19,1	Wheels
9060-2045	900	600	650	810	510	580	180	400	8	21,2	--
9060-2045T	900	600	650	810	510	580	180	400	8	21,8	Wheels
9060-4025	900	600	650	810	510	580	380	200	8	20,9	--
9060-4025T	900	600	650	810	510	580	380	200	8	21,5	Wheels
9060-3045	900	600	750	810	510	680	280	400	8	22,5	--
9060-3045T	900	600	750	810	510	680	280	400	8	23,1	Wheels
9060-5025	900	600	750	810	510	680	480	200	8	22,2	--
9060-5025T	900	600	750	810	510	680	480	200	8	22,8	Wheels
9060-4045	900	600	850	810	510	780	380	400	8	24,2	--
9060-4045T	900	600	850	810	510	780	380	400	8	24,8	Wheels
9060-5045	900	600	950	810	510	880	480	400	8	25,5	--
9060-5045T	900	600	950	810	510	880	480	400	8	26,1	Wheels
9070-2012	900	700	325	810	610	255	180	75	4	16,6	--
9070-2012T	900	700	325	810	610	255	180	75	4	17,2	Wheels
9070-3012	900	700	425	810	610	355	280	75	4	18,3	--
9070-3012T	900	700	425	810	610	355	280	75	4	18,9	Wheels
9070-4012	900	700	525	810	610	455	380	75	4	20,0	--
9070-4012T	900	700	525	810	610	455	380	75	4	20,6	Wheels
9070-2034	900	700	540	810	610	470	180	290	8	22,0	--
9070-2034T	900	700	540	810	610	470	180	290	8	22,6	Wheels
9070-3024	900	700	540	810	610	470	280	190	8	22,0	--
9070-3024T	900	700	540	810	610	470	280	190	8	22,6	Wheels
9070-2044	900	700	640	810	610	570	180	390	8	23,7	--
9070-2044T	900	700	640	810	610	570	180	390	8	24,3	Wheels
9070-4024	900	700	640	810	610	570	380	190	8	23,7	--

9060-4025T

9060-5045

PRODUCT	EXTERNAL DIMENSIONS (MM)			INTERNAL DIMENSIONS (MM)					Handles	Weight Appr. (Kg)	Special Features
	Length	Width	Height	Length	Width	Height	Base Height	Lid Height			
9070-4024T	900	700	640	810	610	570	380	190	8	24,3	Wheels
9070-6012	900	700	725	810	610	655	580	75	4	26,4	--
9070-6012T	900	700	725	810	610	655	580	75	4	27,0	Wheels
9070-3044	900	700	740	810	610	670	280	390	8	25,4	--
9070-3044T	900	700	740	810	610	670	280	390	8	26,0	Wheels
9070-4034	900	700	740	810	610	670	380	290	8	25,4	--
9070-4034T	900	700	740	810	610	670	380	290	8	26,0	Wheels
9070-2064	900	700	840	810	610	770	180	590	8	27,2	--
9070-2064T	900	700	840	810	610	770	180	590	8	27,8	Wheels
9070-6024	900	700	840	810	610	770	580	190	4	30,1	--
9070-6024T	900	700	840	810	610	770	580	190	4	30,7	Wheels
9070-3064	900	700	940	810	610	870	280	590	8	28,9	--
9070-3064T	900	700	940	810	610	870	280	590	8	29,5	Wheels
9070-6034	900	700	940	810	610	870	580	290	8	31,8	--
9070-6034T	900	700	940	810	610	870	580	290	8	32,4	Wheels
9070-4064	900	700	1040	810	610	970	380	590	8	30,6	--
9070-4064T	900	700	1040	810	610	970	380	590	8	31,0	Wheels
9070-6044	900	700	1040	810	610	970	580	390	8	33,5	--
9070-6044T	900	700	1040	810	610	970	580	390	8	34,1	Wheels
9070-6064	900	700	1240	810	610	1170	580	590	8	37,0	--
9070-6064T	900	700	1240	810	610	1170	580	590	8	37,6	Wheels
9080-5012	900	800	625	810	710	555	480	75	4	25,2	--
9080-5012T	900	800	625	810	710	555	480	75	4	25,8	Wheels
10040-3010	1000	400	405	910	310	355	280	75	2	12,1	--
10040-3010T	1000	400	405	910	310	355	280	75	2	12,7	Wheels
10050-3010	1000	500	405	910	410	355	280	75	2	13,8	--
10050-3010T	1000	500	405	910	410	355	280	75	2	14,4	Wheels
10060-2012	1000	600	325	910	510	255	180	75	4	16,5	--
10060-2012T	1000	600	325	910	510	255	180	75	4	17,1	Wheels

9070-6024

10040-3010T

PRODUCT	EXTERNAL DIMENSIONS (MM)			INTERNAL DIMENSIONS (MM)					Handles	Weight Appr. (Kg)	Special Features
	Length	Width	Height	Length	Width	Height	Base Height	Lid Height			
10060-3012	1000	600	425	910	510	355	280	75	4	17,7	--
10060-3012T	1000	600	425	910	510	355	280	75	4	18,3	Wheels
10060-2025	1000	600	450	910	510	380	180	200	8	19,9	--
10060-2025T	1000	600	450	910	510	380	180	200	8	20,5	Wheels
10060-3025	1000	600	450	910	510	480	280	200	8	21,1	--
10060-3025T	1000	600	450	910	510	480	280	200	8	21,7	Wheels
10060-4012	1000	600	525	910	510	455	380	75	4	20,0	--
10060-4012T	1000	600	525	910	510	455	380	75	4	20,6	Wheels
10060-2045	1000	600	650	910	510	580	180	400	8	23,4	--
10060-2045T	1000	600	650	910	510	580	180	400	8	24,0	Wheels
10060-4025	1000	600	650	910	510	580	380	200	8	23,4	--
10060-4025T	1000	600	650	910	510	580	380	200	8	24,0	Wheels
10060-5012	1000	600	625	910	510	555	480	75	4	20,7	--
10060-5012T	1000	600	625	910	510	555	480	75	4	21,3	Wheels
10060-3045	1000	600	750	910	510	680	280	400	8	24,6	--
10060-3045T	1000	600	750	910	510	680	280	400	8	25,2	Wheels
10060-5025	1000	600	750	910	510	680	480	200	8	24,1	--
10060-5025T	1000	600	750	910	510	680	480	200	8	24,7	Wheels
10060-4045	1000	600	850	910	510	780	380	400	8	26,9	--
10060-4045T	1000	600	850	910	510	780	380	400	8	27,5	Wheels
10060-5045	1000	600	950	910	510	880	480	400	8	27,6	--
10060-5045T	1000	600	950	910	510	880	480	400	8	28,2	Wheels
10080-5012	1000	800	625	910	710	555	480	75	4	27,2	--
10080-5012T	1000	800	625	910	710	555	480	75	4	27,8	Wheels
10090-3013	1000	900	430	910	810	350	265	85	4	29,6	--
10090-3013T	1000	900	430	910	810	350	265	85	4	30,2	Wheels
10090-4013	1000	900	530	910	810	450	365	85	4	32,5	--
10090-4013T	1000	900	530	910	810	450	365	85	4	33,1	Wheels
10090-6013	1000	900	730	910	810	650	565	85	4	37,1	--

10060-3012T

10060-4045

PRODUCT	EXTERNAL DIMENSIONS (MM)			INTERNAL DIMENSIONS (MM)					Handles	Weight Appr. (Kg)	Special Features
	Length	Width	Height	Length	Width	Height	Base Height	Lid Height			
10090-6013T	1000	900	730	910	810	650	565	85	4	37,7	Wheels
10090-3044	1000	900	740	910	810	655	265	390	8	39,0	--
10090-3044T	1000	900	740	910	810	655	265	390	8	39,6	Wheels
10090-4034	1000	900	740	910	810	655	365	290	8	39,4	--
10090-4034T	1000	900	740	910	810	655	365	290	8	40,0	Wheels
10090-7013	1000	900	830	910	810	750	665	85	4	39,5	--
10090-7013T	1000	900	830	910	810	750	665	85	4	40,1	Wheels
10090-3074	1000	900	1040	910	810	955	265	690	8	46,4	--
10090-3074T	1000	900	1040	910	810	955	265	690	8	47,0	Wheels
10090-4064	1000	900	1040	910	810	955	365	590	8	46,8	--
10090-4064T	1000	900	1040	910	810	955	365	590	8	47,4	Wheels
10090-6044	1000	900	1040	910	810	955	565	390	8	46,5	--
10090-6044T	1000	900	1040	910	810	955	565	390	8	47,1	Wheels
10090-7034	1000	900	1040	910	810	955	665	290	8	46,7	--
10090-7034T	1000	900	1040	910	810	955	665	290	8	47,0	Wheels
100100-3013	1000	1000	430	910	910	350	265	85	4	32,1	--
100100-3013T	1000	1000	430	910	910	350	265	85	4	32,7	Wheels
100100-4013	1000	1000	530	910	910	450	365	85	4	34,8	--
100100-4013T	1000	1000	530	910	910	450	365	85	4	35,4	Wheels
100100-6013	1000	1000	730	910	910	650	565	85	4	39,9	--
100100-6013T	1000	1000	730	910	910	650	565	85	4	40,5	Wheels
100100-3044	1000	1000	740	910	910	655	265	390	8	42,2	--
100100-3044T	1000	1000	740	910	910	655	265	390	8	42,8	Wheels
100100-4034	1000	1000	740	910	910	655	365	290	8	42,3	--
100100-4034T	1000	1000	740	910	910	655	365	290	8	42,9	Wheels
100100-7013	1000	1000	830	910	910	750	665	85	4	42,5	--
100100-7013T	1000	1000	830	910	910	750	665	85	4	43,1	Wheels
100100-3074	1000	1000	1040	910	910	955	265	690	8	50,0	--
100100-3074T	1000	1000	1040	910	910	955	265	690	8	50,6	Wheels

10090-7013

100100-4034T

PRODUCT	EXTERNAL DIMENSIONS (MM)			INTERNAL DIMENSIONS (MM)					Handles	Weight Appr. (Kg)	Special Features
	Length	Width	Height	Length	Width	Height	Base Height	Lid Height			
100100-4064	1000	1000	1040	910	910	955	365	590	8	50,2	--
100100-4064T	1000	1000	1040	910	910	955	365	590	8	50,8	Wheels
100100-6044	1000	1000	1040	910	910	955	565	390	8	49,9	--
100100-6044T	1000	1000	1040	910	910	955	565	390	8	50,5	Wheels
100100-7034	1000	1000	1040	910	910	955	665	290	8	50,0	--
100100-7034T	1000	1000	1040	910	910	955	665	290	8	50,6	Wheels
11040-3010	1100	400	405	1010	310	355	280	75	2	13,3	--
11040-3010T	1100	400	405	1010	310	355	280	75	2	13,9	Wheels
11050-3010	1100	500	405	1010	410	355	280	75	2	14,9	--
11050-3010T	1100	500	405	1010	410	355	280	75	2	15,5	Wheels
11050-4010	1110	500	505	1010	410	455	380	75	2	16,4	--
11050-4010T	1110	500	505	1010	410	455	380	75	2	17,0	Wheels
11070-2015T	1100	700	350	1010	610	300	180	120	4	20,2	Wheels
11070-2025T	1100	700	450	1010	610	400	180	220	8	24,0	Wheels
11070-3615T	1100	700	510	1010	610	460	340	120	4	23,9	Wheels
11070-3625T	1100	700	610	1010	610	560	340	220	8	27,7	Wheels
11070-5215T	1100	700	670	1010	610	620	500	120	4	27,9	Wheels
11070-5225T	1100	700	770	1010	610	720	500	220	8	31,7	Wheels
12040-3010	1200	400	405	1110	310	355	280	75	2	14,4	--
12040-3010T	1200	400	405	1110	310	355	280	75	2	15,0	Wheels
12050-1410	1200	500	245	1110	410	195	120	75	2	13,8	--
12050-1410T	1200	500	245	1110	410	195	120	75	2	14,4	Wheels
12050-3010	1200	500	405	1110	410	355	280	75	2	16,3	--
12050-3010T	1200	500	405	1110	410	355	280	75	2	15,9	Wheels
12050-1432	1200	500	465	1110	410	415	120	295	4	18,0	--
12050-1432T	1200	500	465	1110	410	415	120	295	4	18,6	Wheels
12060-2012	1200	600	325	1110	510	255	180	75	4	18,8	--
12060-2012T	1200	600	325	1110	510	255	180	75	4	19,4	Wheels
12060-3012F	1200	600	425	1110	510	255	180	75	4	20,5	Forklift Skids

11070-2025T

12060-3012F

PRODUCT	EXTERNAL DIMENSIONS (MM)			INTERNAL DIMENSIONS (MM)					Handles	Weight Appr. (Kg)	Special Features
	Length	Width	Height	Length	Width	Height	Base Height	Lid Height			
12060-3012	1200	600	425	1110	510	355	280	75	4	19,1	--
12060-3012T	1200	600	425	1110	510	355	280	75	4	19,7	Wheels
12060-2025	1200	600	450	1110	510	380	180	200	8	23,1	--
12060-2025T	1200	600	450	1110	510	380	180	200	8	23,7	Wheels
12060-3712T6R-M4-M16	1200	600	470						4	33,5	Wheels
12060-4012F	1200	600	525	1110	510	355	280	75	4	22,5	Forklift Skids
12060-4012	1200	600	525	1110	510	455	380	75	4	21,6	--
12060-4012T	1200	600	525	1110	510	455	380	75	4	22,2	Wheels
12060-3025F	1200	600	550	1110	510	380	180	200	8	24,8	Forklift Skids
12060-3025	1200	600	550	1110	510	480	280	200	8	23,4	--
12060-3025T	1200	600	550	1110	510	480	280	200	8	24,0	Wheels
12060-5012F	1200	600	625	1110	510	455	380	75	4	24,4	Forklift Skids
12060-5012	1200	600	625	1110	510	555	480	75	4	23,1	--
12060-5012T	1200	600	625	1110	510	555	480	75	4	23,7	Wheels
12060-2045	1200	600	650	1110	510	580	180	400	8	27,0	--
12060-2045T	1200	600	650	1110	510	580	180	400	8	27,4	Wheels
12060-4025F	1200	600	650	1110	510	480	280	200	8	26,8	Forklift Skids
12060-4025	1200	600	650	1110	510	580	380	200	8	25,9	--
12060-4025T	1200	600	650	1110	510	580	380	200	8	26,5	Wheels
12060-6012F	1200	600	725	1110	510	555	480	75	4	26,4	Forklift Skids
12060-3045F	1200	600	750	1110	510	580	180	400	8	28,7	Forklift Skids
12060-3045	1200	600	750	1110	510	680	280	400	8	27,3	--
12060-3045T	1200	600	750	1110	510	680	280	400	8	27,9	Wheels
12060-5025F	1200	600	750	1110	510	580	380	200	8	28,7	Forklift Skids
12060-5025	1200	600	750	1110	510	680	480	200	8	27,4	--
12060-5025T	1200	600	750	1110	510	680	480	200	8	28,0	Wheels
12060-4045F	1200	600	850	1110	510	680	280	400	8	30,7	Forklift Skids
12060-4045	1200	600	850	1110	510	780	380	400	8	29,8	--
12060-4045T	1200	600	850	1110	510	780	380	400	8	30,4	Wheels

12060-3712T6R-M4-M16

12060-2045

PRODUCT	EXTERNAL DIMENSIONS (MM)			INTERNAL DIMENSIONS (MM)					Handles	Weight Appr. (Kg)	Special Features
	Length	Width	Height	Length	Width	Height	Base Height	Lid Height			
12060-6025F	1200	600	850	1110	510	680	480	200	8	30,7	Forklift Skids
12060-5045F	1200	600	950	1110	510	780	380	400	8	32,6	Forklift Skids
12060-5045	1200	600	950	1110	510	880	480	400	8	31,3	--
12060-5045T	1200	600	950	1110	510	880	480	400	8	31,9	Wheels
12060-6045F	1200	600	1050	1110	510	880	480	400	8	34,6	Forklift Skids
12070-2012	1200	700	325	1110	610	255	180	75	4	20,7	--
12070-2012T	1200	700	325	1110	610	255	180	75	4	21,3	Wheels
12070-3012	1200	700	425	1110	610	355	280	75	4	22,8	--
12070-3012T	1200	700	425	1110	610	355	280	75	4	23,4	Wheels
12070-4012	1200	700	525	1110	610	455	380	75	4	24,9	--
12070-4012T	1200	700	525	1110	610	455	380	75	4	25,5	Wheels
12070-2034	1200	700	540	1110	610	470	180	290	8	27,0	--
12070-2034T	1200	700	540	1110	610	470	180	290	8	27,6	Wheels
12070-3024	1200	700	540	1110	610	470	280	190	8	27,1	--
12070-3024T	1200	700	540	1110	610	470	280	190	8	27,7	Wheels
12070-2044	1200	700	640	1110	610	570	180	390	8	29,1	--
12070-2044T	1200	700	640	1110	610	570	180	390	8	29,7	Wheels
12070-4024	1200	700	640	1110	610	570	380	190	8	29,2	--
12070-4024T	1200	700	640	1110	610	570	380	190	8	29,8	Wheels
12070-6012	1200	700	725	1110	610	655	580	75	4	32,4	--
12070-6012T	1200	700	725	1110	610	655	580	75	4	33,0	Wheels
12070-3044	1200	700	740	1110	610	670	280	390	8	31,2	--
12070-3044T	1200	700	740	1110	610	670	280	390	8	31,8	Wheels
12070-4034	1200	700	740	1110	610	670	380	290	8	31,2	--
12070-4034T	1200	700	740	1110	610	670	380	290	8	31,8	Wheels
12070-2064	1200	700	840	1110	610	770	180	590	8	35,2	--
12070-2064T	1200	700	840	1110	610	770	180	590	8	35,8	Wheels
12070-6024	1200	700	840	1110	610	770	580	190	8	36,3	--
12070-6024T	1200	700	840	1110	610	770	580	190	8	36,9	Wheels

12060-6025F

12070-4024

PRODUCT	EXTERNAL DIMENSIONS (MM)			INTERNAL DIMENSIONS (MM)					Handles	Weight Appr. (Kg)	Special Features
	Length	Width	Height	Length	Width	Height	Base Height	Lid Height			
12070-3064	1200	700	940	1110	610	870	280	590	8	37,3	--
12070-3064T	1200	700	940	1110	610	870	280	590	8	37,9	Wheels
12070-6034	1200	700	940	1110	610	870	580	290	8	38,7	--
12070-6034T	1200	700	940	1110	610	870	580	290	8	39,3	Wheels
12070-4064	1200	700	1040	1110	610	970	380	590	8	39,4	--
12070-4064T	1200	700	1040	1110	610	970	380	590	8	39,7	Wheels
12070-6044	1200	700	1040	1110	610	970	580	390	8	40,8	--
12070-6044T	1200	700	1040	1110	610	970	580	390	8	41,4	Wheels
12080-5012	1200	800	625	1110	710	555	480	75	4	34,8	--
12080-5012T	1200	800	625	1110	710	555	480	75	4	35,4	Wheels
120100-4013	1200	1000	530	1110	910	450	365	85	4	40,1	--
120100-4013T	1200	1000	530	1110	910	450	365	85	4	40,7	Wheels
120100-7013	1200	1000	830	1110	910	750	665	85	4	48,6	--
120100-7013T	1200	1000	830	1110	910	750	665	85	4	49,4	Wheels
14040-3010	1400	400	405	1310	310	355	280	75	2	16,3	--
14040-3010T	1400	400	405	1310	310	355	280	75	2	16,9	Wheels
15060-3012	1500	600	425	1410	510	355	280	75	4	25,2	--
15060-3012T	1500	600	425	1410	510	355	280	75	4	25,8	Wheels
15060-4012	1500	600	525	1410	510	455	380	75	4	27,5	--
15060-4012T	1500	600	525	1410	510	455	380	75	4	28,1	Wheels
15060-3025	1500	600	550	1410	510	480	280	200	8	30,2	--
15060-3025T	1500	600	550	1410	510	480	280	200	8	30,8	Wheels
15060-5012	1500	600	625	1410	510	555	480	75	4	29,9	--
15060-5012T	1500	600	625	1410	510	555	480	75	4	30,5	Wheels
15060-4025	1500	600	650	1410	510	580	380	200	8	32,5	--
15060-4025T	1500	600	650	1410	510	580	380	200	8	33,1	Wheels
15060-3045	1500	600	750	1410	510	680	280	400	8	35,0	--
15060-3045T	1500	600	750	1410	510	680	280	400	8	35,6	Wheels
15060-5025	1500	600	750	1410	510	680	480	200	8	34,9	--

14040-3010T

15060-5012T

PRODUCT	EXTERNAL DIMENSIONS (MM)			INTERNAL DIMENSIONS (MM)					Handles	Weight Appr. (Kg)	Special Features
	Length	Width	Height	Length	Width	Height	Base Height	Lid Height			
15060-5025T	1500	600	750	1410	510	680	480	200	8	35,5	Wheels
15060-4045	1500	600	850	1410	510	780	380	400	8	37,3	--
15060-4045T	1500	600	850	1410	510	780	380	400	8	37,9	Wheels
15060-5045	1500	600	950	1410	510	880	480	400	8	39,7	--
15060-5045T	1500	600	950	1410	510	880	480	400	8	40,3	Wheels
15070-4012	1500	700	525	1410	610	455	380	75	4	30,8	--
15070-4012T	1500	700	525	1410	610	455	380	75	4	31,4	Wheels
16060-3012	1600	600	425	1510	510	355	280	75	4	26,9	--
16060-3012T	1600	600	425	1510	510	355	280	75	4	27,5	Wheels
16060-4012F	1600	600	525	1510	510	350	275	75	4	30,2	Forklift Skids
16060-4012	1600	600	525	1510	510	455	380	75	4	29,4	--
16060-4012T	1600	600	525	1510	510	455	380	75	4	30,0	Wheels
16060-3025	1600	600	550	1510	510	480	280	200	8	32,1	--
16060-3025T	1600	600	550	1510	510	480	280	200	8	32,7	Wheels
16060-5012F	1600	600	625	1510	510	450	375	75	4	32,7	Forklift Skids
16060-4025F	1600	600	650	1510	510	475	275	200	8	35,4	Forklift Skids
16060-4025	1600	600	650	1510	510	580	380	200	8	34,6	--
16060-4025T	1600	600	650	1510	510	580	380	200	8	35,0	Wheels
16060-5025F	1600	600	750	1510	510	575	375	200	8	37,9	Forklift Skids
160125-4144F	1600	1250	855	1510	1160	670	280	390	8	80,0	Forklift Skids
160125-5134F	1600	1250	855	1510	1160	670	380	290	8	80,7	Forklift Skids
160125-4154F	1600	1250	955	1510	1160	770	280	490	8	84,3	Forklift Skids
160125-5144F	1600	1250	955	1510	1160	770	380	390	8	85,1	Forklift Skids
160125-6134F	1600	1250	955	1510	1160	770	480	290	8	87,3	Forklift Skids
160125-5154F	1600	1250	1055	1510	1160	870	380	490	8	89,4	Forklift Skids
160125-6144F	1600	1250	1055	1510	1160	870	480	390	8	91,7	Forklift Skids
17040-3010	1700	400	405	1610	310	355	280	75	2	19,6	--
17040-3010T	1700	400	405	1610	310	355	280	75	2	20,2	Wheels
18060-4012	1800	600	525	1710	510	455	380	75	4	32,1	--

160125-4154F

17040-3010

PRODUCT	EXTERNAL DIMENSIONS (MM)			INTERNAL DIMENSIONS (MM)					Handles	Weight Appr. (Kg)	Special Features
	Length	Width	Height	Length	Width	Height	Base Height	Lid Height			
18060-4012T	1800	600	525	1710	510	455	380	75	4	32,7	Wheels
18070-2012	1800	700	325	1710	610	255	180	75	4	30,0	--
18070-2012T	1800	700	325	1710	610	255	180	75	4	30,6	Wheels
18070-3012	1800	700	425	1710	610	355	280	75	4	32,8	--
18070-3012T	1800	700	425	1710	610	355	280	75	4	33,4	Wheels
18070-4012	1800	700	525	1710	610	455	380	75	4	35,0	--
18070-4012T	1800	700	525	1710	610	455	380	75	4	35,6	Wheels
18070-2034	1800	700	540	1710	610	470	180	290	8	38,5	--
18070-2034T	1800	700	540	1710	610	470	180	290	8	39,1	Wheels
18070-3024	1800	700	540	1710	610	470	280	190	8	38,4	--
18070-3024T	1800	700	540	1710	610	470	280	190	8	39,0	Wheels
18070-2044	1800	700	640	1710	610	570	180	390	8	41,2	--
18070-2044T	1800	700	640	1710	610	570	180	390	8	41,8	Wheels
18070-4024	1800	700	640	1710	610	570	380	190	8	40,6	--
18070-4024T	1800	700	640	1710	610	570	380	190	8	41,2	Wheels
18070-6012	1800	700	725	1710	610	655	580	75	4	46,2	--
18070-6012T	1800	700	725	1710	610	655	580	75	4	46,8	Wheels
18070-3044	1800	700	740	1710	610	670	280	390	8	43,9	--
18070-3044T	1800	700	740	1710	610	670	280	390	8	44,5	Wheels
18070-4034	1800	700	740	1710	610	670	380	290	8	43,4	--
18070-4034T	1800	700	740	1710	610	670	380	290	8	44,0	Wheels
18070-2064	1800	700	840	1710	610	770	180	590	8	52,2	--
18070-2064T	1800	700	840	1710	610	770	180	590	8	52,8	Wheels
18070-6024	1800	700	840	1710	610	770	580	190	8	51,8	--
18070-6024T	1800	700	840	1710	610	770	580	190	8	52,4	Wheels
18070-3064	1800	700	940	1710	610	870	280	590	8	54,9	--
18070-3064T	1800	700	940	1710	610	870	280	590	8	55,5	Wheels
18070-6034	1800	700	940	1710	610	870	580	290	8	54,6	--
18070-6034T	1800	700	940	1710	610	870	580	290	8	55,2	Wheels

18070-2012T

18070-6024T

PRODUCT	EXTERNAL DIMENSIONS (MM)			INTERNAL DIMENSIONS (MM)					Handles	Weight Appr. (Kg)	Special Features
	Length	Width	Height	Length	Width	Height	Base Height	Lid Height			
18070-4064	1800	700	1040	1710	610	970	380	590	8	57,0	--
18070-4064T	1800	700	1040	1710	610	970	380	590	8	57,6	Wheels
18070-6044	1800	700	1040	1710	610	970	580	390	8	57,3	--
18070-6044T	1800	700	1040	1710	610	970	580	390	8	57,9	Wheels
21060-3012	2100	600	425	2010	510	355	280	75	4	34,3	--
21060-3012T	2100	600	425	2010	510	355	280	75	4	34,9	Wheels
21060-4012F	2100	600	525	2010	510	350	275	75	4	35,6	Forklift Skids
21060-4012	2100	600	525	2010	510	455	380	75	4	36,8	--
21060-4012T	2100	600	525	2010	510	455	380	75	4	37,4	Wheels
21060-3025	2100	600	550	2010	510	470	280	190	8	40,7	--
21060-3025T	2100	600	550	2010	510	470	280	190	8	41,3	Wheels
21060-5012F	2100	600	625	2010	510	450	375	75	4	38,4	Forklift Skids
21060-4025F	2100	600	625	2010	510	465	275	190	8	42,0	Forklift Skids
21060-4025	2100	600	650	2010	510	570	380	190	8	43,2	--
21060-4025T	2100	600	650	2010	510	570	380	190	8	43,8	Wheels
21060-5025F	2100	600	750	2010	510	565	375	190	8	44,8	Forklift Skids
22060-4012	2200	600	525	2110	510	455	380	75	4	38,1	--
22060-4012T	2200	600	525	2110	510	455	380	75	4	38,7	Wheels
22090-3152F	2200	900	825	2110	810	635	170	465	8	86,4	Forklift Skids
22090-5824F	2200	900	825	2110	810	635	445	190	8	86,5	Forklift Skids
22090-5852F	2200	900	1100	2110	810	910	445	465	8	99,8	Forklift Skids
24060-4012	2400	600	525	2310	510	455	380	75	4	45,0	--
24060-4012T	2400	600	525	2310	510	455	380	75	4	45,6	Wheels
27060-4012	2700	600	525	2610	510	455	380	75	4	52,8	--
27060-4012T	2700	600	525	2610	510	455	380	75	4	53,4	Wheels
28090-3152F	2800	900	825	2710	810	635	170	465	8	106,6	Forklift Skids
28090-5824F	2800	900	825	2710	810	635	445	190	8	106,8	Forklift Skids
28090-5852F	2800	900	1100	2710	810	910	445	465	8	122,8	Forklift Skids
28090-5852F	2800	900	1100	2710	810	910	445	465	8	122,8	Forklift Skids

21060-4012F

28090-5852F

CUSTOM SOLUTIONS

SHOCK AND VIBRATION DAMPENING

Delicate equipment and instruments are transported and used under complete protection from shock, vibration, moisture and impact.

Cases are furnished with the appropriate grade foam and/or shock mounting equipment in line with special project requirements.

As part of our manufacturing process all foam interiors are CAD designed and tailor made, in house, using high speed CNC routing, laminating, drilling, blocking and hand sculpting.

Suprobox R series liner foams are carefully selected to match the weight and shock/vibration requirements of the payload. Also, specific anti-static and conductive foams are used for static sensitive equipment when necessary.

Suprobox R series cases offer a complete service including design, manufacturing, customization and interior design.

Our Sales Team and Design engineers work together to create the perfect solution starting with the selection of the right case and right dampening material.

R SERIES OPTIONS

Suprobox R Series cases come with stainless steel black latches. Coupling catches and handles may be customized along with several other options such as color. Membrane valve and plastic handles are included in the standard configuration.

Cases are manufactured in two main colors: black and olive drab; while gray, desert mustard, blue, orange and red are offered as optional.

List of options are: stainless steel handles, mechanical valve, hinged lid, humidity indicator, desiccant port, stainless steel tie-down ring, document holder, forklift skids, caster set, lockable catch, lockable wire catch, A6 and A7 size card holders, wheels.

Mechanical (PRV) Pressure Valve

Desiccant port

Humidity Indicator

Hinged Lid

Stainless Steel Tie - Down Rings

Stainless Steel Handle

Forklift Skids & Risers

Plastic Handle (Standard)

Membrane Valve (Standard)

Lockable Catch

Lockable Wire Catch

Wheels

Caster Set

Document Holder

A6 Name Plate

A7 Name Plate

COLOR OPTIONS

Black

Olive Drab

Gray

Blue

Desert Mustard

Orange

Red

CAUTION !
TP-LINK
TP-LINK

SUPROBOX RACK SERIES

FEATURES

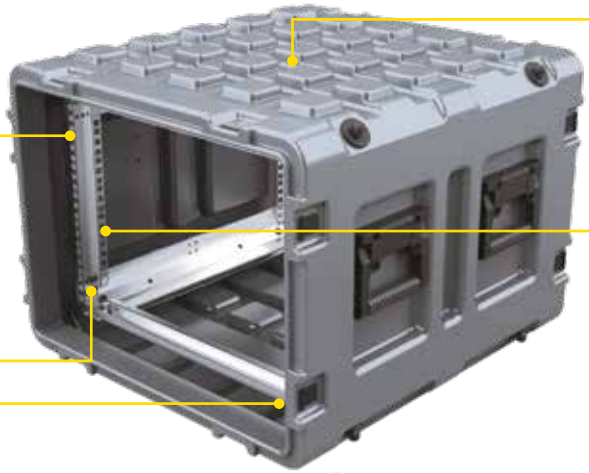

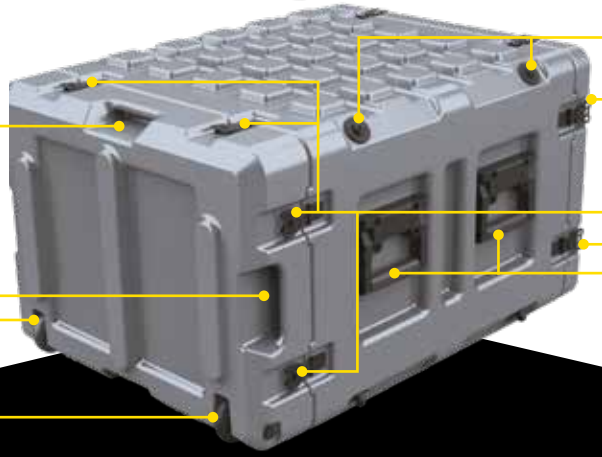

19'' corrosion proof vertical square hole rack rails

Anti vibration mounts

M6 cage nuts

Easy grip

Built in edge casters (0812T range)

Multibrix stacking feature. Fits not only on all rack sizes but entire Suprobox range

Easy mount square punched inner frame

Lid hanger

Stainless steel catches

Heavy-duty polymer handles with soft rubber grip

Manufactured as a solid uniform structure which makes it extra resistant to impact & vibration. UV resistant made to withstand extreme temperatures & solar load.

HEAT | DROP | RAIN | CRUSH | DUST

RACK05U38XR-0808
RACK05U38XR-0812T

MODEL	U HEIGHT	EXTERNAL DIMENSIONS (mm)			CHASSIS DEPTH (mm)	WEIGHT (Kg)	HANDLES	WHEELS	PRESSURE VALVE
	U	Depth	Length	Width					
RACK05U38XR-0808	5U	374	676	570	380	17,3	4	No	Yes
RACK05U38XR-0812T	5U	374	706	570	380	18,4	6	Yes	Yes

RACK07U38XR-0808
RACK07U38XR-0812T

MODEL	U HEIGHT	EXTERNAL DIMENSIONS (mm)			CHASSIS DEPTH (mm)	WEIGHT (Kg)	HANDLES	WHEELS	PRESSURE VALVE
	U	Depth	Length	Width					
RACK07U38XR-0808	7U	463	676	570	380	19,2	4	No	Yes
RACK07U38XR-0812T	7U	463	706	570	380	20,3	6	Yes	Yes

RACK03U48XR-0808
RACK03U48XR-0812T

MODEL	U HEIGHT	EXTERNAL DIMENSIONS (mm)			CHASSIS DEPTH (mm)	WEIGHT (Kg)	HANDLES	WHEELS	PRESSURE VALVE
	U	Depth	Length	Width					
RACK03U48XR-0808	3U	285	776	570	480	15,7	4	No	Yes
RACK03U48XR-0812T	3U	285	806	570	480	16,9	6	Yes	Yes

RACK05U48XR-0808
RACK05U48XR-0812T

MODEL	U HEIGHT	EXTERNAL DIMENSIONS (mm)			CHASSIS DEPTH (mm)	WEIGHT (Kg)	HANDLES	WHEELS	PRESSURE VALVE
	U	Depth	Length	Width					
RACK05U48XR-0808	5U	374	776	570	480	18,4	4	No	Yes
RACK05U48XR-0812T	5U	374	806	570	480	19,4	6	Yes	Yes

RACK07U48XR-0808
RACK07U48XR-0812T

MODEL	U HEIGHT	EXTERNAL DIMENSIONS (mm)			CHASSIS DEPTH (mm)	WEIGHT (Kg)	HANDLES	WHEELS	PRESSURE VALVE
	U	Depth	Length	Width					
RACK07U48XR-0808	7U	463	776	570	480	20,3	4	No	Yes
RACK07U48XR-0812T	7U	463	806	570	480	21,4	6	Yes	Yes

RACK09U48XR-0808
RACK09U48XR-0812T

MODEL	U HEIGHT	EXTERNAL DIMENSIONS (mm)			CHASSIS DEPTH (mm)	WEIGHT (Kg)	HANDLES	WHEELS	PRESSURE VALVE
	U	Depth	Length	Width					
RACK09U48XR-0808	9U	552	776	570	480	22,3	4	No	Yes
RACK09U48XR-0812T	9U	552	806	570	480	23,4	6	Yes	Yes

RACK11U48XR-0808
RACK11U48XR-0812T

MODEL	U HEIGHT	EXTERNAL DIMENSIONS (mm)			CHASSIS DEPTH (mm)	WEIGHT (Kg)	HANDLES	WHEELS	PRESSURE VALVE
	U	Depth	Length	Width					
RACK11U48XR-0808	11U	641	776	570	480	25,3	4	No	Yes
RACK11U48XR-0812T	11U	641	806	570	480	26,5	6	Yes	Yes

RACK14U48XR-0808
RACK14U48XR-0812T

MODEL	U HEIGHT	EXTERNAL DIMENSIONS (mm)			CHASSIS DEPTH (mm)	WEIGHT (Kg)	HANDLES	WHEELS	PRESSURE VALVE
	U	Depth	Length	Width					
RACK14U48XR-0808	14U	775	776	570	480	29,8	4	No	Yes
RACK14U48XR-0812T	14U	775	806	570	480	30,9	6	Yes	Yes

RACK03U61XR-0808
RACK03U61XR-0812T

MODEL	U HEIGHT	EXTERNAL DIMENSIONS (mm)			CHASSIS DEPTH (mm)	WEIGHT (Kg)	HANDLES	WHEELS	PRESSURE VALVE
	U	Depth	Length	Width					
RACK03U61XR-0808	3U	285	900	570	610	17,9	4	No	Yes
RACK03U61XR-0812T	3U	285	930	570	610	19,1	6	Yes	Yes

RACK05U61XR-0808
RACK05U61XR-0812T

MODEL	U HEIGHT	EXTERNAL DIMENSIONS (mm)			CHASSIS DEPTH (mm)	WEIGHT (Kg)	HANDLES	WHEELS	PRESSURE VALVE
	U	Depth	Length	Width					
RACK05U61XR-0808	5U	374	900	570	610	20,3	4	No	Yes
RACK05U61XR-0812T	5U	374	930	570	610	21,4	6	Yes	Yes

RACK07U61XR-0808
RACK07U61XR-0812T

MODEL	U HEIGHT	EXTERNAL DIMENSIONS (mm)			CHASSIS DEPTH (mm)	WEIGHT (Kg)	HANDLES	WHEELS	PRESSURE VALVE
	U	Depth	Length	Width					
RACK07U61XR-0808	7U	463	900	570	610	22,1	4	No	Yes
RACK07U61XR-0812T	7U	463	930	570	610	23,2	6	Yes	Yes

RACK09U61XR-0808
RACK09U61XR-0812T

MODEL	U HEIGHT	EXTERNAL DIMENSIONS (mm)			CHASSIS DEPTH (mm)	WEIGHT (Kg)	HANDLES	WHEELS	PRESSURE VALVE
	U	Depth	Length	Width					
RACK09U61XR-0808	9U	552	900	570	610	24,2	4	No	Yes
RACK09U61XR-0812T	9U	552	930	570	610	25,3	6	Yes	Yes

RACK11U61XR-0808
RACK11U61XR-0812T

MODEL	U HEIGHT	EXTERNAL DIMENSIONS (mm)			CHASSIS DEPTH (mm)	WEIGHT (Kg)	HANDLES	WHEELS	PRESSURE VALVE
	U	Depth	Length	Width					
RACK11U61XR-0808	11U	641	900	570	610	27,5	4	No	Yes
RACK11U61XR-0812T	11U	641	930	570	610	28,7	6	Yes	Yes

RACK14U61XR-0808
RACK14U61XR-0812T

MODEL	U HEIGHT	EXTERNAL DIMENSIONS (mm)			CHASSIS DEPTH (mm)	WEIGHT (Kg)	HANDLES	WHEELS	PRESSURE VALVE
	U	Depth	Length	Width					
RACK14U61XR-0808	14U	775	900	570	610	31,7	4	No	Yes
RACK14U61XR-0812T	14U	775	930	570	610	32,9	6	Yes	Yes

RACK03U78XR-0808
RACK03U78XR-0812T

MODEL	U HEIGHT	EXTERNAL DIMENSIONS (mm)			CHASSIS DEPTH (mm)	WEIGHT (Kg)	HANDLES	WHEELS	PRESSURE VALVE
	U	Depth	Length	Width					
RACK03U78XR-0808	3U	285	1076	570	780	20,4	4	No	Yes
RACK03U78XR-0812T	3U	285	1106	570	780	21,7	6	Yes	Yes

RACK05U78XR-0808
RACK05U78XR-0812T

MODEL	U HEIGHT	EXTERNAL DIMENSIONS (mm)			CHASSIS DEPTH (mm)	WEIGHT (Kg)	HANDLES	WHEELS	PRESSURE VALVE
	U	Depth	Length	Width					
RACK05U78XR-0808	5U	374	1076	570	780	22,9	4	No	Yes
RACK05U78XR-0812T	5U	374	1106	570	780	24,0	6	Yes	Yes

RACK07U78XR-0808
RACK07U78XR-0812T

MODEL	U HEIGHT	EXTERNAL DIMENSIONS (mm)			CHASSIS DEPTH (mm)	WEIGHT (Kg)	HANDLES	WHEELS	PRESSURE VALVE
	U	Depth	Length	Width					
RACK07U78XR-0808	7U	463	1076	570	780	25,4	4	No	Yes
RACK07U78XR-0812T	7U	463	1106	570	780	26,5	6	Yes	Yes

RACK09U78XR-0808
RACK09U78XR-0812T

MODEL	U HEIGHT	EXTERNAL DIMENSIONS (mm)			CHASSIS DEPTH (mm)	WEIGHT (Kg)	HANDLES	WHEELS	PRESSURE VALVE
	U	Depth	Length	Width					
RACK09U78XR-0808	9U	552	1076	570	780	28,9	4	No	Yes
RACK09U78XR-0812T	9U	552	1106	570	780	30,0	6	Yes	Yes

SUPROBOX RACKS

Shock and vibration protection for your electronics. Polymer case with aluminium rack frame suspended by anti-vibration mounts.

Our RACK cases offer protection of delicate equipment used in a vast spectrum of professional fields such as: electronics, data protection, lab & testing, aerospace, broadcast, meteorology, satellite communications, radars, mobile military.

- Ruggedized roto-molded case body made from impact resistant PE material
- 380 mm – 480 mm – 610 mm – 780 mm rack depth
- 80 mm or 120 mm lid with edge casters
- Standard 19" Rack width designed to meet ANSI/EIA-310-C
- Square hole rack rails to accommodate 6 mm standard cage nuts
- Heavy-duty polymer handles with soft rubber grip
- Shock mounts for maximum protection during transit
- Stainless steel catches
- Watertight gasket
- Mechanical pressure relief valve (Standard)
- Lid hangers (standard)
- Standard payload range 20-75 kg
- Size range 3U to 14U
- Light weight compact design
- Gridlines featured on the lid are specially designed for pallet strapping.
- Reduced footprint
- Multibrix® stacking and storage system (secure stacking and cross stacking of same or different size cases).
- Tested and Approved – MIL-STD 810 G, STANAG 4280, Def Stan 81-41
- IP 65 rated for dust and water ingress

SUPROBOX Rack Dimensions

Chassis Group	Rack Model	U Height	External Dimensions (mm)			Chassis Depth	Weight	Handles	Wheels	Pressure Valve
		U	Height	Length	Width	mm	Kg			
380 mm Chassis	RACK05U38XR-0808	5U	374	676	570	380	17,3	4	NO	YES
	RACK05U38XR-0812T	5U	374	706	570	380	18,4	6	YES	YES
	RACK07U38XR-0808	7U	463	676	570	380	19,2	4	NO	YES
	RACK07U38XR-0812T	7U	463	706	570	380	20,3	6	YES	YES
480 mm Chassis	RACK03U48XR-0808	3U	285	776	570	480	15,7	4	NO	YES
	RACK03U48XR-0812T	3U	285	806	570	480	16,9	6	YES	YES
	RACK05U48XR-0808	5U	374	776	570	480	18,4	4	NO	YES
	RACK05U48XR-0812T	5U	374	806	570	480	19,4	6	YES	YES
	RACK07U48XR-0808	7U	463	776	570	480	20,3	4	NO	YES
	RACK07U48XR-0812T	7U	463	806	570	480	21,4	6	YES	YES
	RACK09U48XR-0808	9U	552	776	570	480	22,3	4	NO	YES
	RACK09U48XR-0812T	9U	552	806	570	480	23,4	6	YES	YES
	RACK11U48XR-0808	11U	641	776	570	480	25,3	4	NO	YES
	RACK11U48XR-0812T	11U	641	806	570	480	26,5	6	YES	YES
	RACK14U48XR-0808	14U	775	776	570	480	29,8	4	NO	YES
	RACK14U48XR-0812T	14U	775	806	570	480	30,9	6	YES	YES

Chassis Group	Rack Model	U Height	External Dimensions (mm)			Chassis Depth	Weight	Handles	Wheels	Pressure Valve
		U	Height	Length	Width	mm	Kg			
610 mm Chassis	RACK03U61XR-0808	3U	285	900	570	610	17,9	4	NO	YES
	RACK03U61XR-0812T	3U	285	930	570	610	19,1	6	YES	YES
	RACK05U61XR-0808	5U	374	900	570	610	20,3	4	NO	YES
	RACK05U61XR-0812T	5U	374	930	570	610	21,4	6	YES	YES
	RACK07U61XR-0808	7U	463	900	570	610	22,1	4	NO	YES
	RACK07U61XR-0812T	7U	463	930	570	610	23,2	6	YES	YES
	RACK09U61XR-0808	9U	552	900	570	610	24,2	4	NO	YES
	RACK09U61XR-0812T	9U	552	930	570	610	25,3	6	YES	YES
	RACK11U61XR-0808	11U	641	900	570	610	27,5	4	NO	YES
	RACK11U61XR-0812T	11U	641	930	570	610	28,7	6	YES	YES
	RACK14U61XR-0808	14U	775	900	570	610	31,7	4	NO	YES
	RACK14U61XR-0812T	14U	775	930	570	610	32,9	6	YES	YES
780 mm Chassis	RACK03U78XR-0808	3U	285	1076	570	780	20,4	4	NO	YES
	RACK03U78XR-0812T	3U	285	1106	570	780	21,7	6	YES	YES
	RACK05U78XR-0808	5U	374	1076	570	780	22,9	4	NO	YES
	RACK05U78XR-0812T	5U	374	1106	570	780	24	6	YES	YES
	RACK07U78XR-0808	7U	463	1076	570	780	25,4	4	NO	YES
	RACK07U78XR-0812T	7U	463	1106	570	780	26,5	6	YES	YES
	RACK09U78XR-0808	9U	552	1076	570	780	28,9	4	NO	YES
	RACK09U78XR-0812T	9U	552	1106	570	780	30	6	YES	YES

RACK OPTIONS

Suprobox Rack Series cases come with stainless steel black latches. Coupling catches and handles may be customized along with several other options such as color. Mechanical pressure relief valve and plastic handles are included in the standard configuration.

Cases are manufactured in two main colors: black and olive drab; while gray, desert mustard, blue, orange and red are offered as optional.

List of options are: membrane valve, stainless steel handles, humidity indicator, stainless steel tie-down ring, riser & caster set, lockable catch, lockable wire catch, A6 and A7 size card holders, wheels, document pouch and coupling strap.

Mechanical Pressure Relief Valve (Standard)

Humidity Indicator

Stainless Steel Tie - Down Rings

Stainless Steel Handle

Plastic Handle (Standard)

Membrane Valve

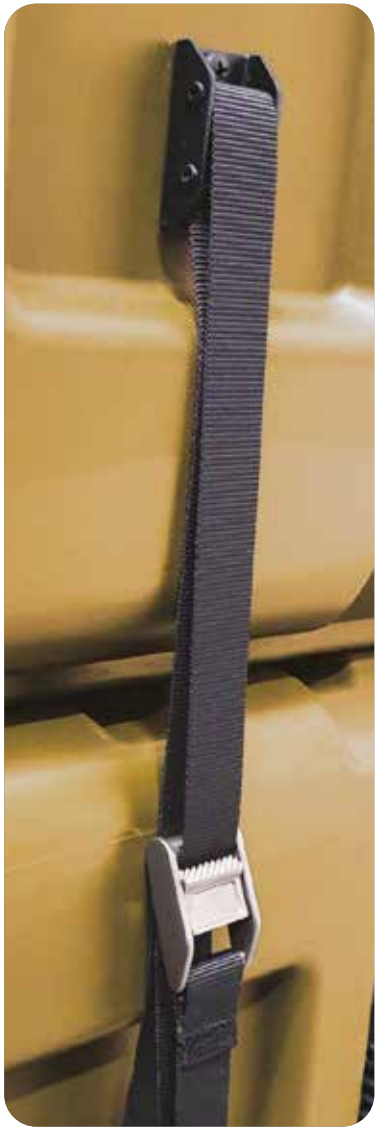

Coupling Strap

Lockable Catch

Lockable Wire Catch

Wheels (Standard on 12T Models)

Riser & Caster

Document Pouch

A6 Name Plate

A7 Name Plate

COLOR OPTIONS

Black

Olive Drab

Gray

Blue

Desert Mustard

Orange

Red

Multibrix Stacking System

Multibrix® is a patented unique stacking and storage system allowing secure stacking and cross stacking of same or different size cases.

Two different size Suprobox cases featuring the **Multibrix®** stacking and storage system can easily interlock so they can be stacked securely.

The same system allows the cases to be stacked at a 90°angle and transported as thus, as an extra space saving option.

The **Multibrix®** stacking feature is designed to enhance the structural rigidity of the cases.

Gridlines featured on the lid are specially designed for pallet strapping.

The Suprobox range comes in multiples of 10 cm sizes which makes them perfect for standard palletizing and metric packaging options.

Suprobox R Series and Rack Series Are Tested and Approved

Corner Drop

Face Drop

Transverse Shock

Vertical Shock Rack

MIL-STD-810 G

VIBRATION
MIL STD 810G Method 514.6 Procedure I Category 4

FUNCTIONAL SHOCK
MIL STD 810G Method 516.6 Procedure I

TRANSIT DROP
using MIL STD 810G Method 516.6 Procedure IV

LOW TEMPERATURE
MIL STD 810G Method 502.5 Procedure

HIGH TEMPERATURE
MIL STD 810G Method 501.5 Procedure I

HUMIDITY
MIL STD 810G Method 507.5 Procedure II

BLOWING SAND
MIL STD 810G Method 510.5 Procedure II

BLOWING RAIN
MIL STD 810G Method 506.5

IP RATING
IP 65 / IP 67 EN 60529

STANAG 4280
DEF-STAN 81-41 PART 3 ISSUE 5

LOW TEMPERATURE TEST
(NATO LEVEL 1)

DRY HEAT TEST
(NATO LEVEL 1)

VIBRATION TEST: SINUSOIDAL
(NATO LEVEL 1)

VERTICAL IMPACT TEST
(NATO LEVEL J)

HORIZONTAL IMPACT TEST
(NATO LEVEL J)

IS A PART OF VERTICAL IMPACT TEST

Suprobox Sp. z.o.o.
OKRĘŻNA 18,
62-025 KOSTRZYN

Tel: (+48) 61 307 33 17
suprobox.com