MICROPOL



Fiber Optics

FOR HARSH ENVIRONMENTS

IT STARTED IN THE SWEDISH ARCHIPELAGO



Micropol has delivered high quality fiber optic products and solutions for more than 30 years. However, the event that lay the foundation to the company dates even further back in time.

In the morning of October 28, 1981, the Soviet submarine U137 was reported to have ran aground in the Karlskrona archipelago, an event that became world news. Anders Andersson, the founder of Micropol, was working at the time in the Royal Air Force. During the 1970's, Anders read about a new technique called fiber optics. He realized its future potential and requested with his superiors to invest time and funding to learn more. Much to his regret the request did not generate much interest.

The grounded Soviet submarine however, brought a light to the use of fiber optics as Sweden during the years to come, had to relate on US Navy sonar equipment, based on fiber optics. As the Swedish Armed Forces engaged in its own development of fiber optics, Anders was commissioned to build knowledge in the area and as a result, the Swedish Armed Forces' Technical School FMTS (Försvarsmaktens Tekniska Skola) in Halmstad was founded. It is still operational and employs more than 400 military and civil professionals.

During the 1980's, companies such as SSAB and Statoil became interested in utilizing fiber optics. They contacted Anders who was given the opportunity to employ his knowledge to the civil market. This resulted in the founding of Micropol in 1988. The company grew and in 1996, it moved to its existing location in Åled, at the Swedish West Coast. The development in fiber optics continued with the introduction of Micropol's own product range and with new, large customers, such as Ericsson and Alcatel.

In 2011, one of Micropol's major products within the defence and security customer segment was launched, the FALCON Expanded Beam Connector. Since then, the FALCON-technology, offering extreme optic performance and the smallest foot-print on the market, is the product of choice for the Swedish Armed Forces (SAF). As a result, Micropol has expanded its customer range to several defence and security globals.

During the 2000's, the fiber optic market has continued to grow. In parallel to the defence and security segment, Micropol's offering is adding value to customers within telecom, broadcast, medical technology, off-shore, mining and industry.



AREAS OF EXPERTISE

Micropol specializes in fiber-optic network solutions, tailored to defense and security needs. Our solutions are ideal for anything from tactical communication to air-defense weapons data transmission.

Our fiber cables are designed specifically for rough use in harsh conditions. Renowned for their exceptional durability, our cables can endure repeated twisting, bending, and even being run over by vehicles or machinery.

In today's geopolitical situation, data security is paramount. Fiber networks – carrying sensitive and mission-critical information – are susceptible to sabotage and eavesdropping. That is why we offer cutting-edge cable-monitoring solutions that instantly alert you to any of tampering with the fiber, thus enhancing your threat detection and response capabilities.

SENSORS & SURVEILLANCE

We offer different kinds of sensor systems for a variety of applications. From optical fiber components in medical devices, to advanced systems for surveillance of fiber optic networks. The latter is increasingly important, as cyber security is a prioritized area for both armed forces, governments, public organizations, banks and insurance companies.



CIVIL COMMUNICATION IN HARSH ENVIRONMENTS



Our expertise in tactical communication has supported us to develop a strong portfolio to the outside broadcast and industry customer segments. We will continue to develop solutions supporting arena events, mining, off-shore and heavy industry, using a large range of connectors, cables and hybrid solutions dedicated to the world's toughest environments.

TACTICAL COMMUNICATION

Communication is crucial for any tactical unit, which makes your fiber network mission critical. Micropol offers a full range of MIL-graded fiber-optical network solutions, supporting all types of tactical communication – from sensitive voice traffic to radar data.

High-integrity network solutions

Micropol's fiber solutions deliver high-integrity voice and data communication in various tactical applications. They connect troops separated by distance, interlink combat command with mobile battlefield units, and unite your tactical capabilities in the field.

Full range of fiber solutions

We offer a full range of fiber-optical solutions, available in many varieties with different connectors, dimensions, number of channels, etc. You can securely separate different types of traffic, such as sensitive voice and data traffic, in different channels. Our large number of products also means a Micropol fiber network is a future-proof investment, flexible enough to meet changing needs over time.



Fiber for the field

Tactical fiber networks must be designed specifically for use in the field. They must withstand harsh weather conditions and rough treatment. Micropol's fiber solutions are extremely rugged, designed to cope with repeated twisting, bending and even being run over by vehicles or machinery.

Smart connector technology

Connectors are a potentially weak spot in a fiber network. Conventional fiber-optical connectors are sensitive to dust or moist intrusion, which has a negative effect on the quality of the data traffic. Micropol addressed the problem by perfecting the expanded beam technology, solving the problem with particle intrusion in fiber connectors.

Long-distance capability

A fiber network must ensure that data quality is maintained end to end, even over long distances. Micropol is renowned for the very low insertion loss of its fiber systems, allowing for multiple joint cable sections and a long total cable length. This offers tactical units the freedom to deploy their tactical where preferable, while reducing the risks associated with close proximity between different tactical equipment.

Preferred supplier

Micropol's solutions are trusted by many renowned defense organizations and material providers for their capability to provide secure tactical communications.

FIBER OPTIC FOR TACTICAL COMMUNICATION

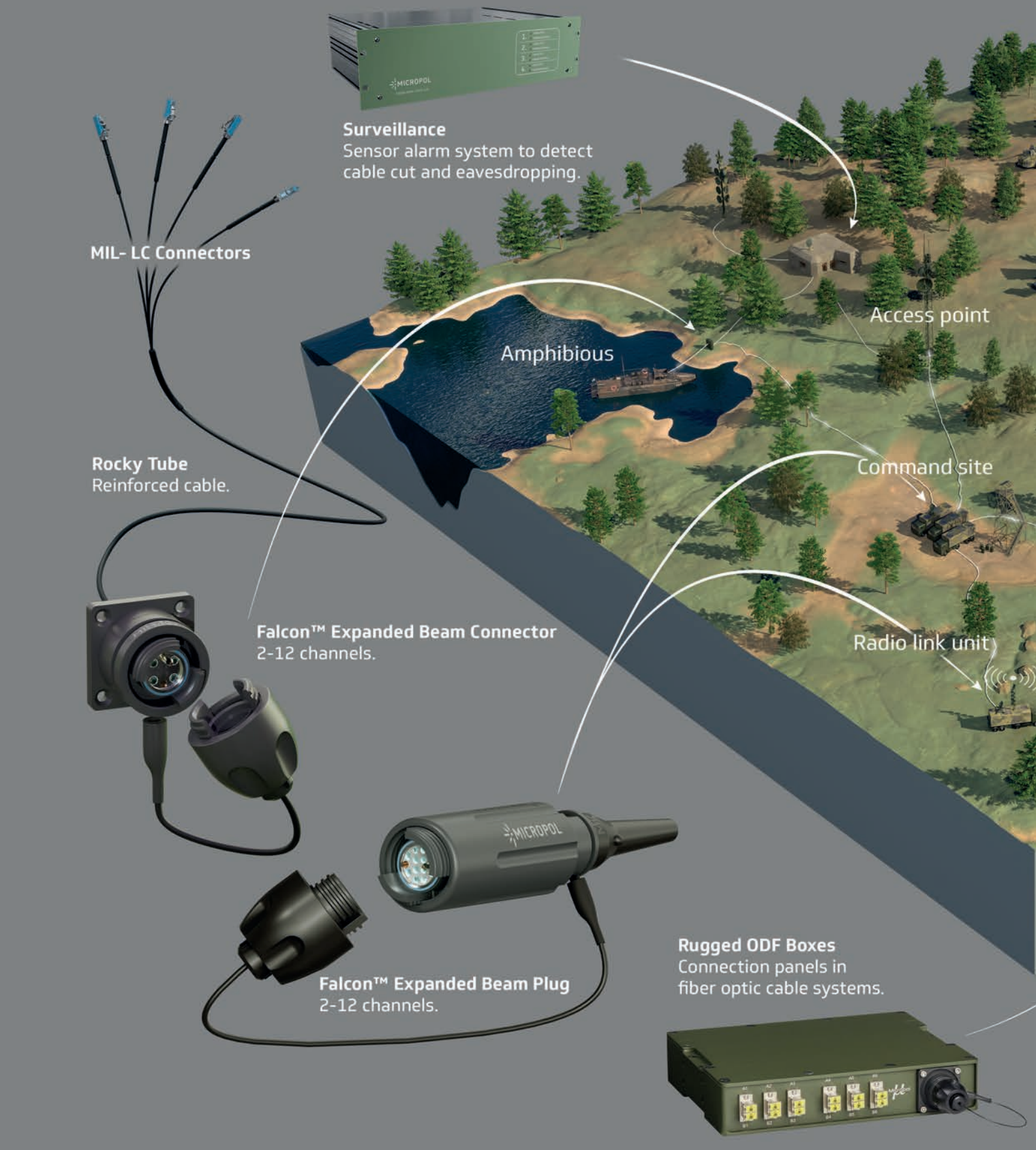



Backpack
Backpack for tactical deployment of fiber optic cable up to 2000 m.

Cable Reel
For tactical deployment of fiber optic cable up to 500 m.

Measurement & Maintenance Kit



FALCON™

The FALCON connectors offer the best attentuation values on the market with 1-12 channels. With an insertion loss of <1,2 dB, it outperforms the NATO specification (<2,5 dB). In addition, the FALCON is the only expanded beam connector on the market that has proven to transfer 40Gbit/s over one channel and can endure up to 100°C.

Built according to MIL-DTL-83526 20 & 21

1 to 12 fiber channels single- or multi mode

JUNIOR



Junior plug



Junior SLP Plug



junior square



junior d-hole



junior D-hole low profile

MINI



Mini plug



Mini SLP Plug



Mini d-hole sealed



Mini xlr



MINI d-hole Low profile



MINI D-hole Super low profile



Mini square

Micropols Expanded Beam Connectors are compatible with other brands, for specification scan the QR-code.

PROCON™

The PROCON connector is based on the proven FALCON design with the same high quality and durability. The PROCON connector will give you everything you expect from a Micropol product at a competitive price without compromising on quality. The PROCON connector offers a data transfer up to 10 Gbit/s over one channel with an insertion loss of <1,5 dB.

Built according to MIL-DTL-83526 20 & 21

1 to 4 fiber channels single- or multi mode

JUNIOR



Junior plug



Junior SLP Plug



junior square



junior d-hole



junior D-hole low profile

MINI



Mini plug



Mini SLP Plug



Mini d-hole sealed



Mini xlr



MINI d-hole Low profile



MINI D-hole Super low profile



Mini square

Micropols Expanded Beam Connectors are compatible with other brands, for specification scan the QR-code.

PROCON™ HMC



PROCON HMC MINI d-hole

PROCON HMC Expanded Beam Connectors are available in 1 to 4 channels, multi-mode or single-mode. PROCON HMC expanded beam connectors have been designed for use in demanding harsh environments where size and space requirements are critical.

The HMC connector series is a small expanded beam connector suited for broadcast, military, industrial, and petrochemical applications.

Features

- 4 fiber channels in single- or multi-mode
- Advanced expanded beam technology
- Hermaphroditic interconnection
- Rugged connector design
- Extremely repeatable, long life
- No adaptors needed
- Easy clean, no special tools



PROCON HMC MINI XLR



PROCON HMC MINI plug

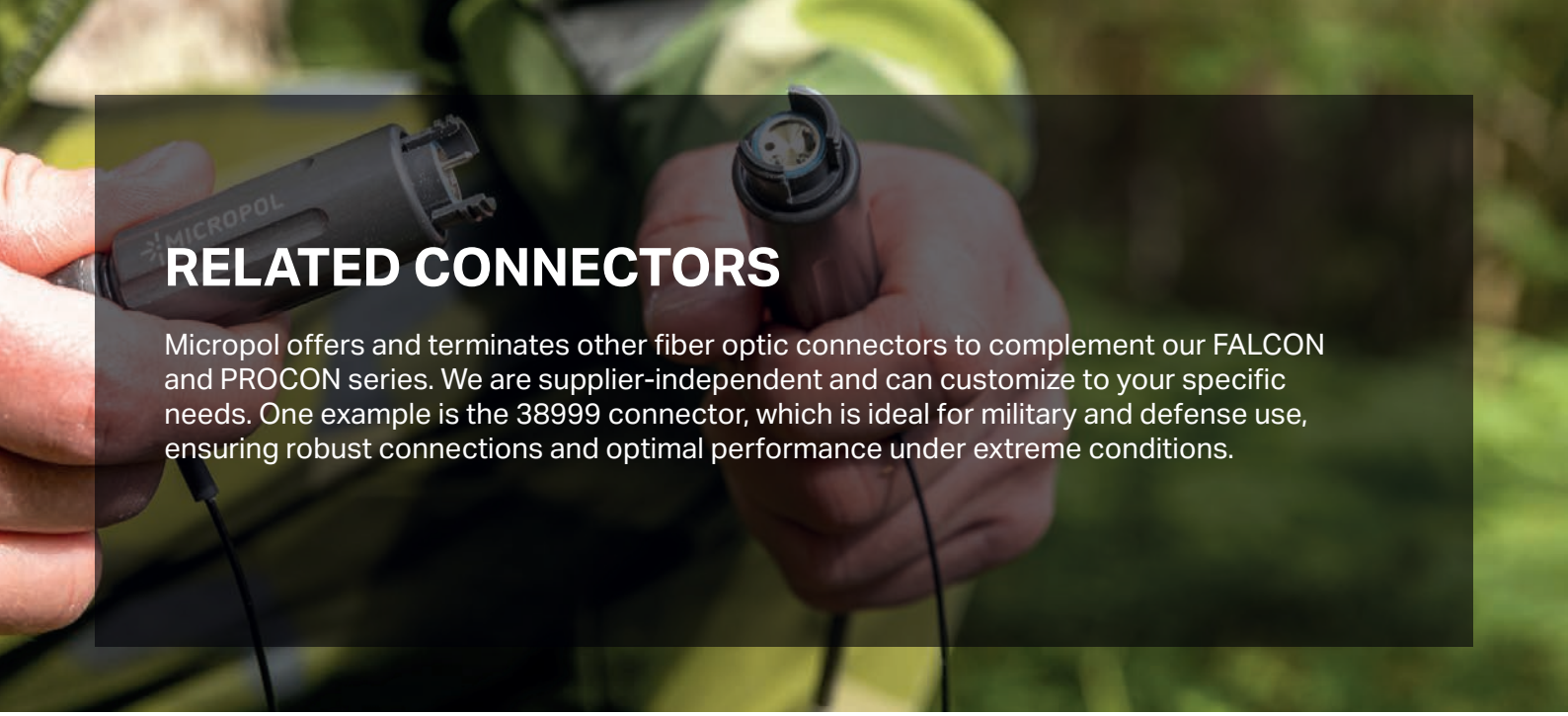

RELATED CONNECTORS

Micropol offers and terminates other fiber optic connectors to complement our FALCON and PROCON series. We are supplier-independent and can customize to your specific needs. One example is the 38999 connector, which is ideal for military and defense use, ensuring robust connections and optimal performance under extreme conditions.

38999 CONNECTORS

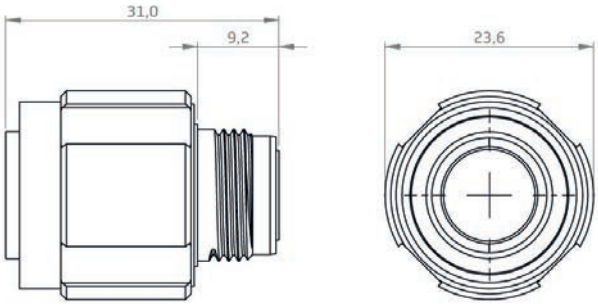

38999 Plug Connector size 11

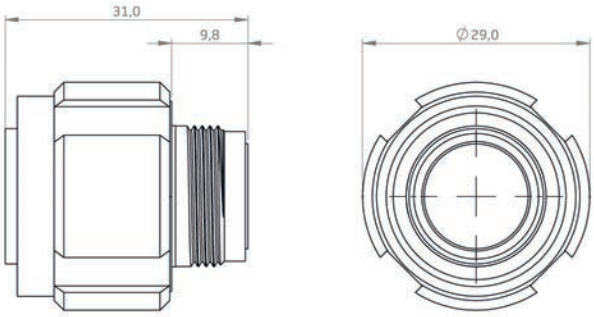

38999 Plug Connector size 13

The MP-38999 Plug Connector is developed to meet the demands of fiber connection in harsh enivronments. MP-38999 ruggedized connectors incorporate individual rear-insertable optical contacts. The removable socket insert helps support easy access to the optical faces to help simplify cleaning and maintenance. Featuring spring-loaded optical contacts, tri-start threadsand anti-vibration couplings, MP-38999-PL connectors are a rugged choice for use in many severe environments and tough application conditions.

Features

- Self-locking threaded coupling
- Contact retention system provides excellent contact retention under severe vibration
- Grounding fingers for excellent EMI protection
- Metal-to-metal bottoming for maximum EMI grounding protection
- Connector is grounded when the shells meet, even before the contacts are engaged
- Trapezoidal thread for excellent shell-to-shell continuity
- Variety of shell materials and finishes



RELATED PRODUCTS

Micropols offers robust products for harsh environments, meeting military and defense standards. Their range includes alarms, cable reels, fiber optic cables, ODF, fanouts, measurement tools, test kits, and tactical backpacks. Designed for reliability and durability, these solutions ensure optimal performance in extreme conditions, supporting critical operations with precision and resilience.



CAMO Cable Monitor

Micropol is offering a cable-monitoring system that will reliably detect attempts to eavesdrop data transmission in fiber-optic networks. With continuious monitoring of changes in the light beam's polarization, the new technology has proven to vastly outperform conventional methods based on changes in signal attenuation.



Cable Reels

Our cable reels organize and protect tactical fiber for use and storage in tough conditions. It combines low weight with high endurance and can be customized in terms of e.g. length and color. It can be fully assembled on a cable reel and in cable lengths of your choice with FALCON or PROCON Connectors or as fanout cables.



Intrusion Alarm

Micropol has developed a concept for a fiber optic-based alarm system specially designed for protecting critical infrastructure cabinets and joint closures from intrusion. The intrusion alarm can be fitted to all kinds of closed compartments and can use the existing fiber network to the cabinets with no need for power supply.



Cables

Micropol is brand independent and can offer a large selection of cables depending on application.



MIL-ODF

Micropol MIL-ODFs (Optical Distribution Frame) are used as connection panels in fiber optic cable systems to connect field tactical cable systems with active equipment.



Fanouts

An alternative to the MIL-ODF when connecting a field tactical cable system to active equipment, is a cable designed to include both expanded beam and LC-connectors. In this case, the use of the Micropol ROCKY tube, which protects and offers bend limitations to patch cords, is an effective way to adapt to harsh environments.



OptiScan

Micropol measurement kit makes it easier to test and investigate fiber cable out in the field. Equipment and accessories for measuring and control of all types of single mode fiber cable available in the Defence area.



Testkit

A complete test kit with equipment for control measurement, mainly of single mode fiber cable and with qualified measuring instruments for military use.



Tactical Backpack

Micropol offers low weight ergonomic backpacks for field deployment of optical fiber in any harsh surroundings. This easy to carry backpack is well suited for use in a variety of situations, e.g. mobile emergency telecommunication stations, broadcast applications and mining and exploration operations.

"Micropol's tactical backpack facilitates the deployment of heavy-duty fiber optic cables in challenging environments, enabling easy relocation when necessary."

CUSTOMER CASE - DIEHL DEFENCE

FIBER OPTIC TO DIEHL DEFENCE, THE IRIS-T SLM SYSTEM

Diehl Defence, a leading system house in the field of ground-based air defence from Germany, delivers high-tech solutions for the defence and security industry. The company is well-known for the advanced air defence system IRIS-T SLM. Micropol and Diehl Defence have a long-term collaboration to which Micropol contributes with high-speed and reliable fiber optic communication for the IRIS-T SLM ground-based air defence system.

About DIEHL Defence

Diehl Defence, headquartered in Überlingen, concentrates the Diehl Group's business activities in the fields of defence and security and is a leading supplier of state-of-the-art air defence systems. As partner of the German Bundeswehr and international armed forces, Diehl Defence develops and delivers high tech equipment in the fields of ground-based air defence, guided missiles, ammunition as well as training and protection. Diehl Defence generates annual sales of over 1.2 billion euros with about 3,700 employees.

Ground-Based Air Defence System IRIS-T SLM

Air defence systems are used to protect the population, important buildings and infrastructure as well as ground troops against attacks from the air. Particularly ground-based air defence is capable of providing continuous area protection over the long term. The system is one of the world´s most advanced air defence systems and provides comprehensive 360° protection against aircraft, helicopters, cruise missiles and other aerial threats.

During 2022, the IRIS-T SLM ground-based air defence system was included in the military aid package that Germany provided to Ukraine. The system is combat proven and according to the customer, it achieved a close to 100 percent hit rate even in waves of attack with more than 12 targets.



Micropol Fiberoptic has a long-standing cooperation with Diehl Defence by providing high-speed and reliable fiberoptic communication to the combat proven IRIS-T SLM ground-based air defence system. Diehl Defence uses Micropol´s FALCON expanded beam products to enable high-speed fiber optic communication between the different units in the IRIS-T SLM system.

The FALCON expanded beam´s market leading insertion loss at <1,2 dB (1310 nm) guarantees that even despite long distances and multiple cables between the units, the data link remains strong even in the most critical situations.

Deploying the heavy-duty fiber optic cable between the different units is done using Micropol's tactical backpack. The ergonomic backpack is specifically designed for field deployment of optical fiber in harsh surroundings. The backpack has a built in crank handle that allows for easy rewinding of the cable when it's time to relocate.

With 30 years of expertise in developing and manufacturing passive fiber optics, we at Micropol strive to find the best solutions for our customers.

The close collaboration with our customers as well as continuous research and development efforts ensure optimal solutions for our customers' fiberoptic challenges.





DIMENSIONS EXPANDED BEAM CONNECTORS

PLUG & CHASSI CONNECTORS

#	Description	Mini D-hole SLP	Mini D-hole	Mini D-hole LP	Junior D-hole	Junior D-hole LP	HMC D-hole	Mini Square	Junior Square
A	Front Diameter	21	21	21	27	27	21	22	27
B	Rear Diameter	17,5	20	20	24	24	21	17,5	24
C	Total length with protective cap and boot	N/A	132	N/A	N/A	N/A	N/A	N/A	N/A
D	Total length with protective cap	49	78	59	2-4ch: 86 6-12ch:101	62	50	50	2-4ch: 86 6-12ch: 101
E	Rear to wall face.	15	39	15	2-4ch: 40 6-12ch: 55	16,5	10	10,5	2-4ch: 36*/42** 6-12ch: 51*/57**
F	Wall face to mating face.	11	17	17	17,5	17,5	15,5	16,5	22*/16**
G	Wall thickness.	1-3	1-3	1-3	1-3	1-3	1-3	1-15	1- 30*/7**
H	Flange shape & size	Ø22	Ø30,5	Ø30,5	Ø37	Ø37	Ø31	o25,3	o37
J	Rear side to mating face.	N/A	N/A	N/A	N/A	N/A	N/A	N/A	N/A

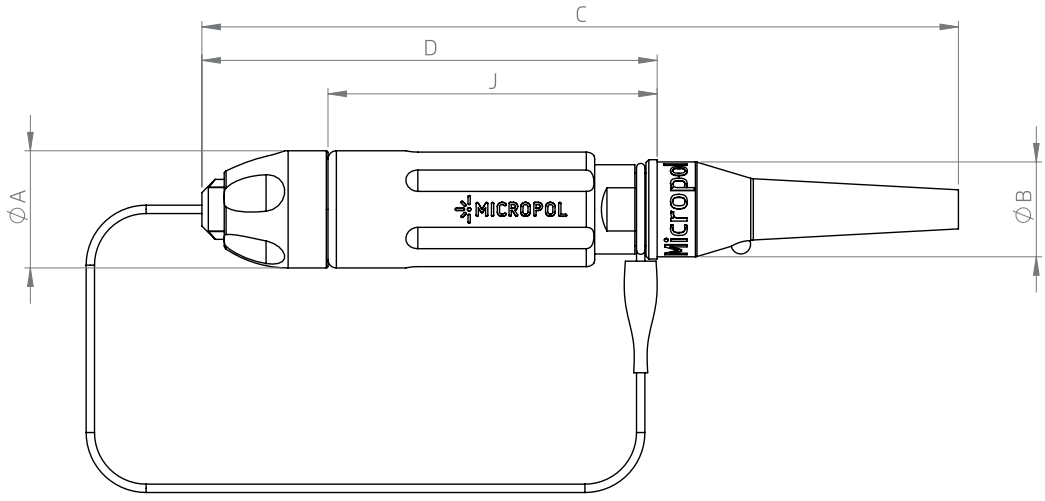

RECOMMENDED PANEL CUT-OUT

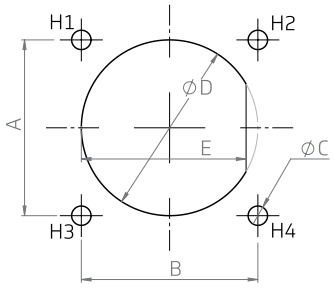

Type \ Dim.	A	B	øC	øD	E
Mini D-hole SLP	NA	NA	NA	17,5 +0,2/-0,0	16,7 +0,2/-0,0
Mini D-hole	NA	NA	NA	24,0 +0,2/-0,0	22,5 +0,2/-0,0
HMC D-hole	NA	NA	NA	24,0 +0,2/-0,0	23,0 +0,2/-0,0
Junior D-hole	NA	NA	NA	30,0 +0,2/-0,0	28,0 +0,2/-0,0
Mini Square	19,0 ±0,2	19,0 ±0,2	-Clearance hole: 2,7 ±0,1 -Threaded hole: M2,5	19,0 ±0,2/-0,0	NA
Junior Square	30,0 ± 0,2	30,0 ± 0,2	-Clearance hole: 3,3 ± 0,1 -Threaded hole: M3	28,0 +0,2/-0,0	NA
Mini XLR	24,0* ±0,2	19,0* ±0,2	-Clearance hole: 3,3 ± 0,1 -Threaded hole: M3	19,0 +0,2/-0,0	NA
HMC XLR	24,0* ±0,2	19,0* ±0,2	-Clearance hole: 3,3 ± 0,1 -Threaded hole: M3	23,0 +0,2/-0,0	NA

All dimensions in mm.
*Only hole H1 & H4 to be used (diagonal)

Junior Square LP	Mini XLR	HMC XLR	Mini Plug	Mini Plug LP	Junior Plug	Junior Plug LP	HMC Plug
27	22	21	21	21	27	27	21
24	17,5	21	18	16	20	20	18
N/A	N/A	N/A	136	N/A	161	N/A	131
62	50	50	82	74	107	107	77
12,5*/18,5**	10,5	12	N/A	N/A	N/A	N/A	N/A
22*/16**	16,5	14	N/A	N/A	N/A	N/A	N/A
1- 12*/7**	1-15	1-11	N/A	N/A	N/A	N/A	N/A
o37	31x26 (hxw)"	31x26 (hxw)"	N/A	N/A	N/A	N/A	N/A
N/A	N/A	N/A	59	51	79	79	52

All dimensions in mm.
* External mounting
** Internal mounting

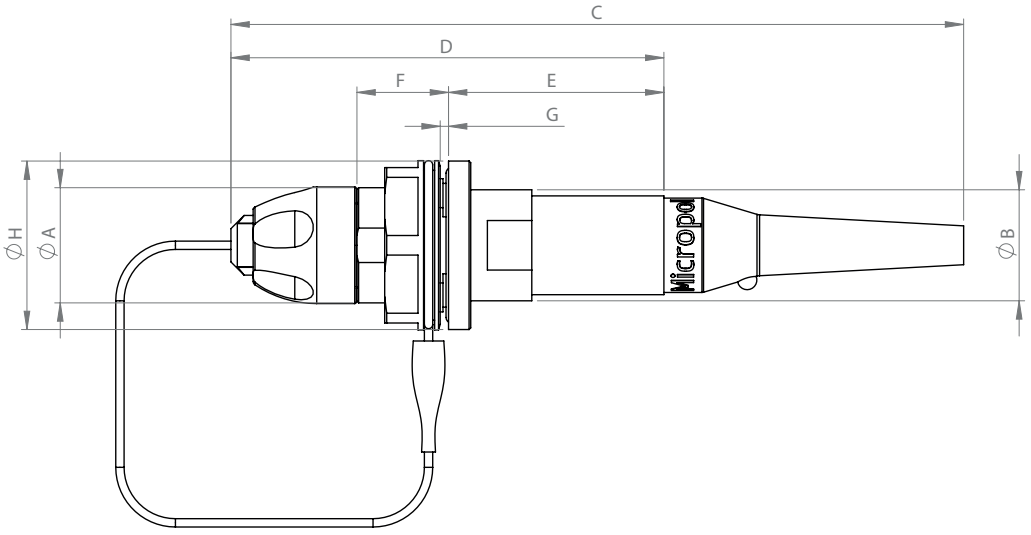



Fiber optics for Harsh Environments 2025 v1.2

MICROPOL

FIBER OPTICS FOR TACTICAL COMMUNICATION

AB Micropol Fiberoptic
Älvdalsvägen 4, 313 50 Åled
+46 (0)35 17 85 39 • info@micropol.com

micropol.com